SHOXS/3200 X8

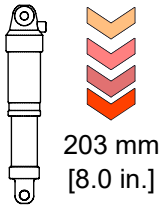

203 mm
[8.0 in.]

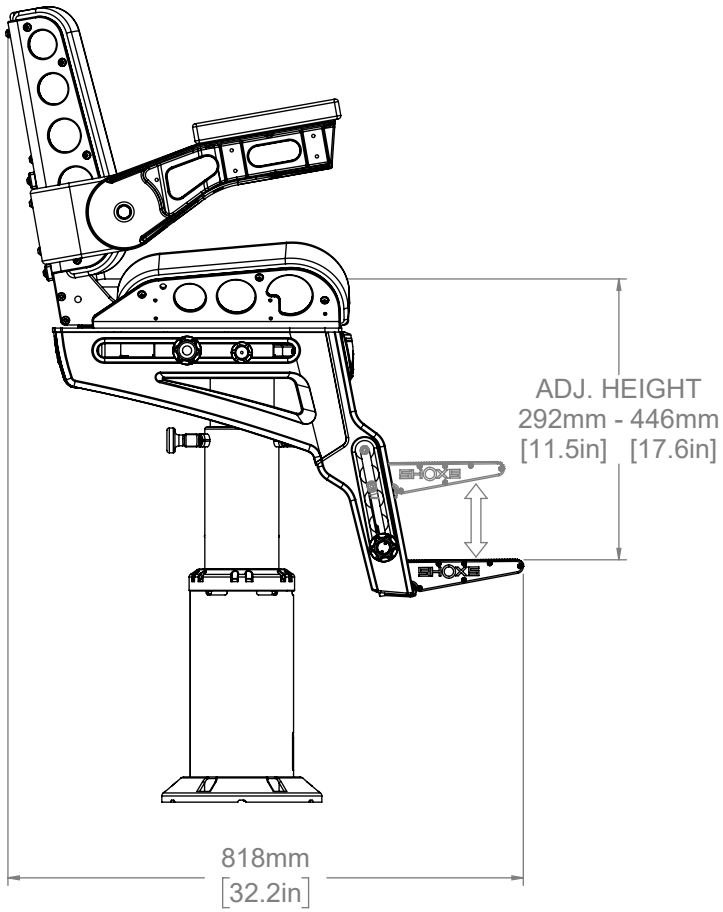

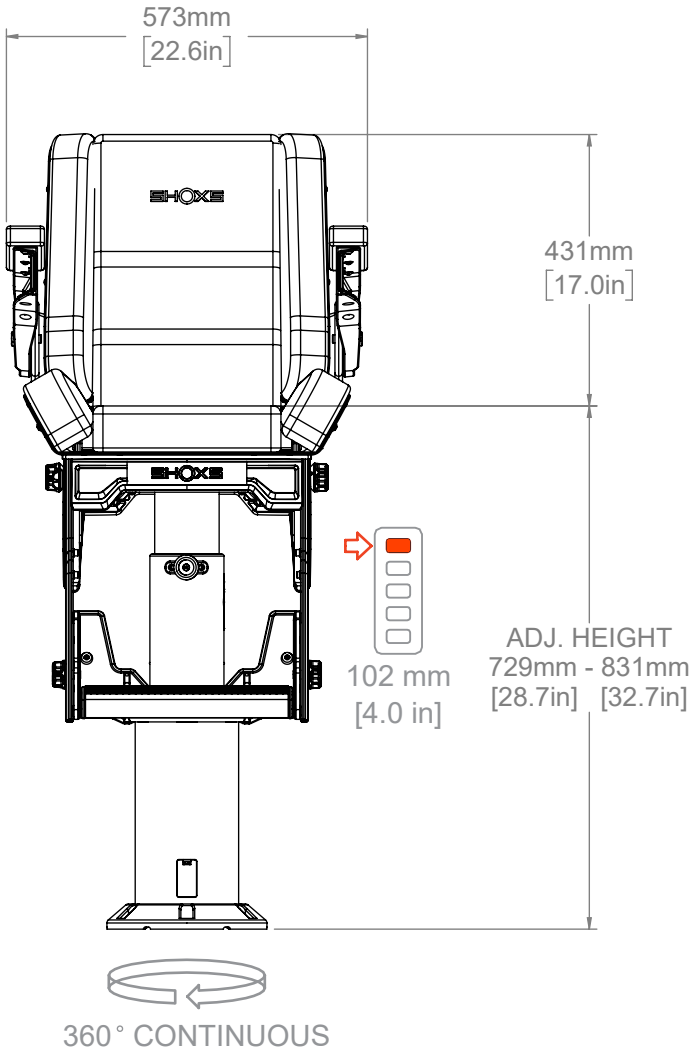

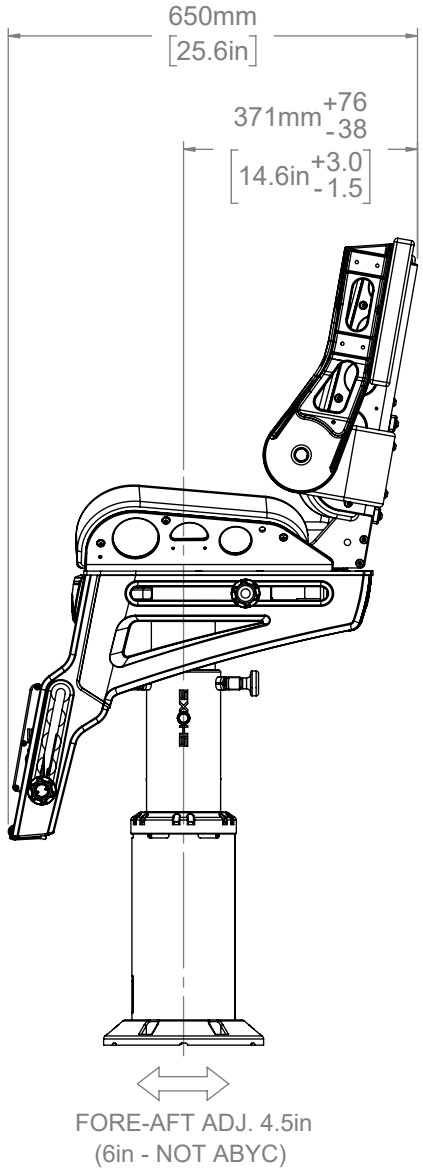

102-2932 Ed Nixon Terrace, Victoria, BC Canada V9B 0B2 | Toll Free: 1.888.637.4697 | Office: 250.652.6003 | info@shoxs.com | shoxs.com
SHOXS is a subsidiary of CDG Coast Dynamics Group LTD

SHOXS/3400 X8

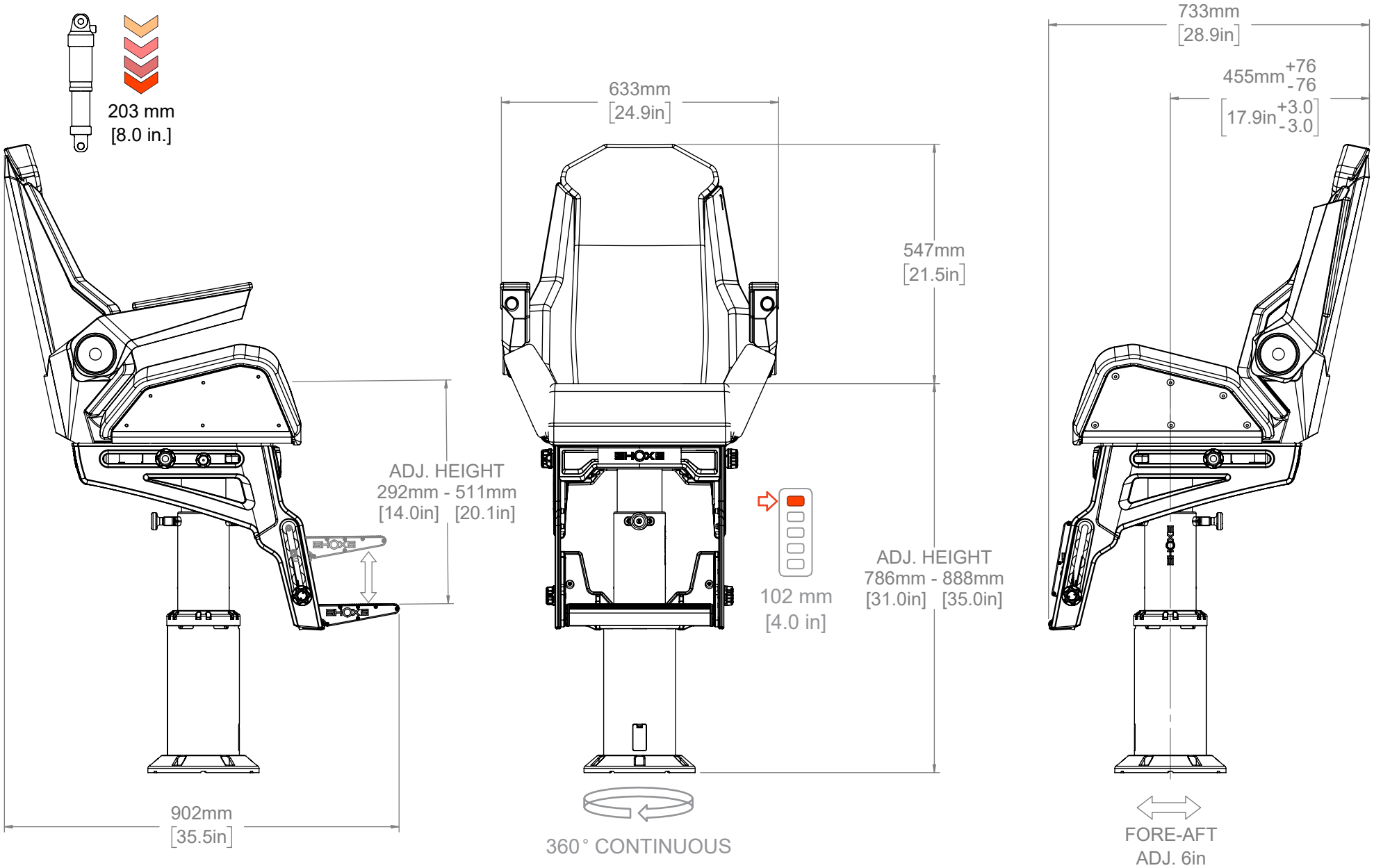

102-2932 Ed Nixon Terrace, Victoria, BC Canada V9B 0B2 | Toll Free: 1.888.637.4697 | Office: 250.652.6003 | info@shoxs.com | shoxs.com
SHOXS is a subsidiary of CDG Coast Dynamics Group LTD